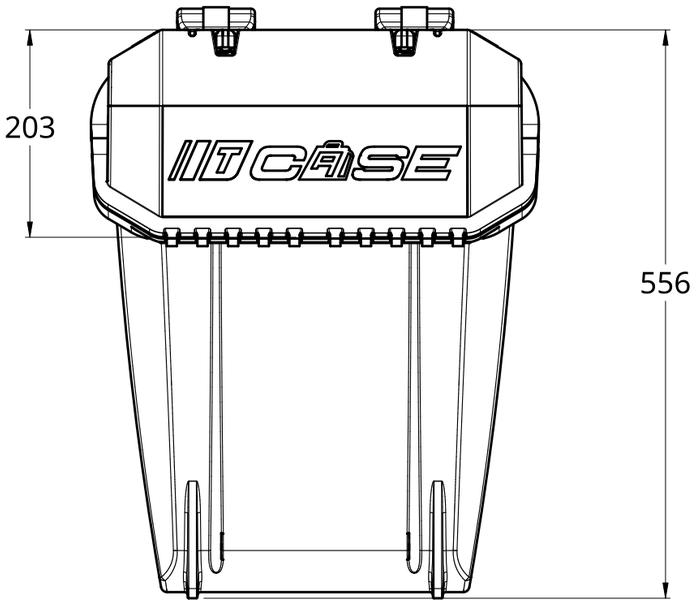

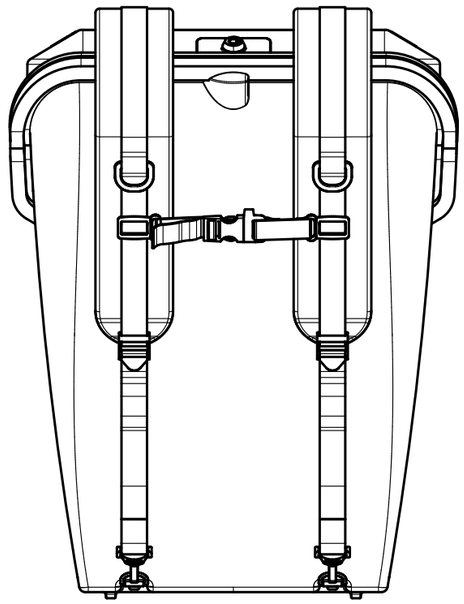

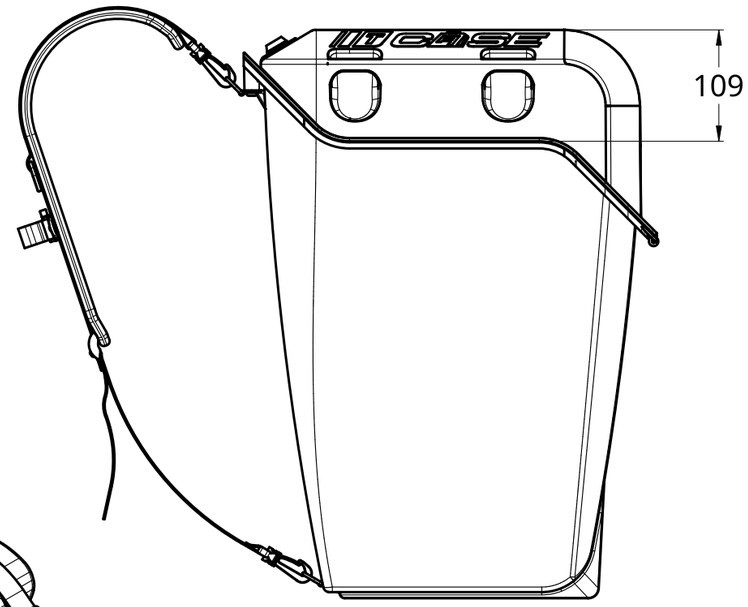

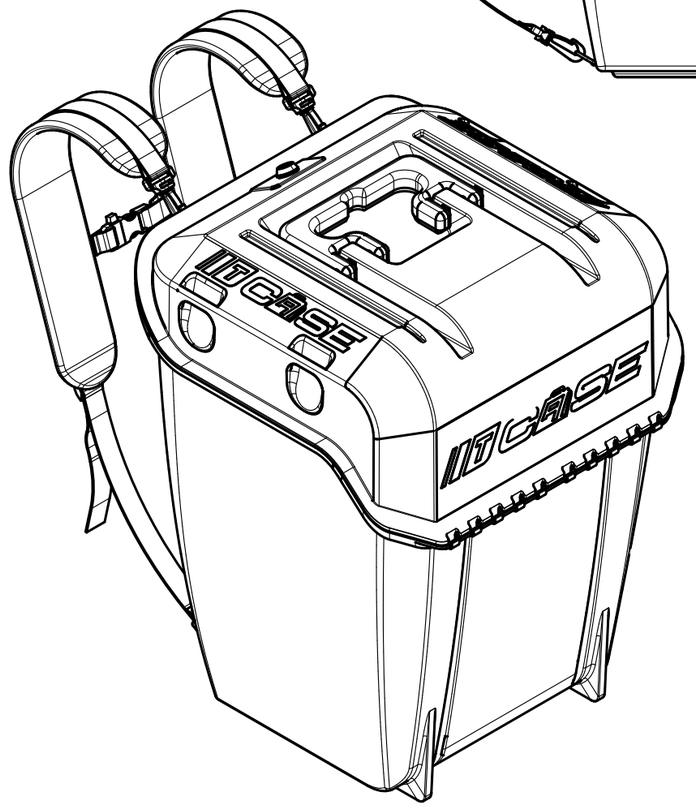

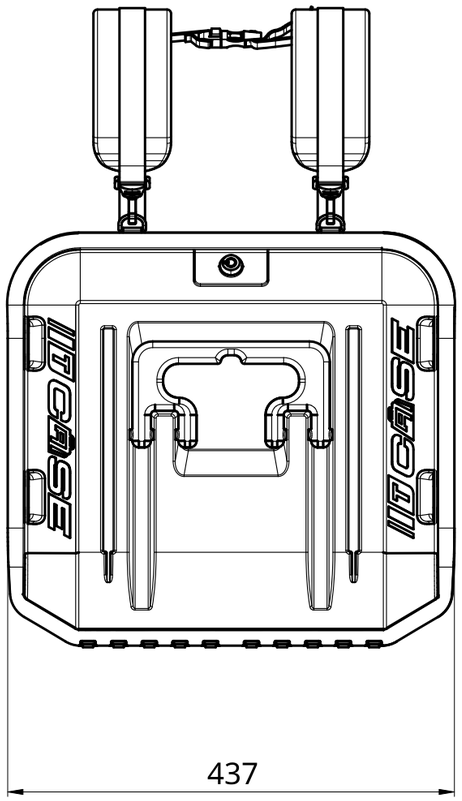

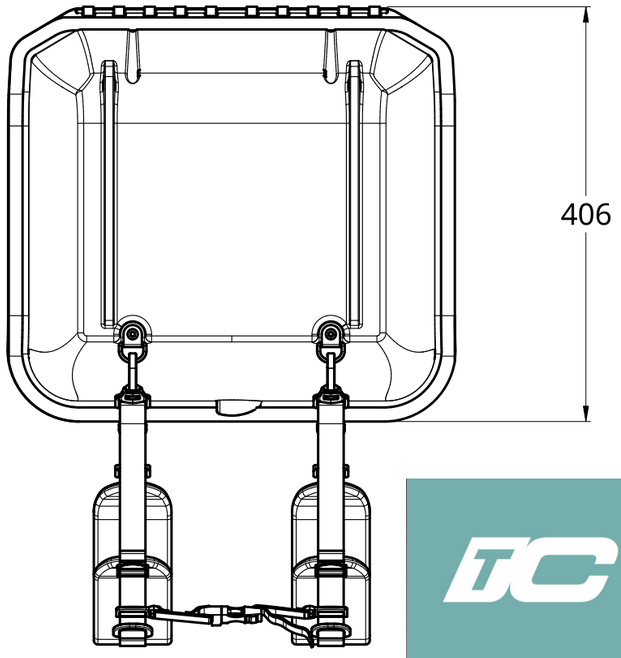

	NAME		DATE
DRAWN	Thomas v.d. Giessen		2025-05-13
CHECKED	YES		
APPROVED	YES		2025-05-13

MATERIAL: ABS

FINISH: ✓

UNLESS OTHERWISE SPECIFIED, DIMENSIONS ARE IN MILLIMETERS

Transport Case

TITLE: TCASE

SIZE: A3

DWG NO.

REV.

SCALE: 1:6

WEIGHT

SHEET: 1 of 1